PRODUCT SHEET

Description:
Sliding Barn Door System "York", F/Wooden Doors, W/Bi- Directional Soft Closing Mechanism, 35-80 Kg, Min. Door, Width: 500mm, Max Door Thickness: 45mm, 2000mm Black, Anodized Top Track

Item number:
28.25.056-0

Units	Box	Carton	HS Code	Barcode
Set			8302411000	5704866517409

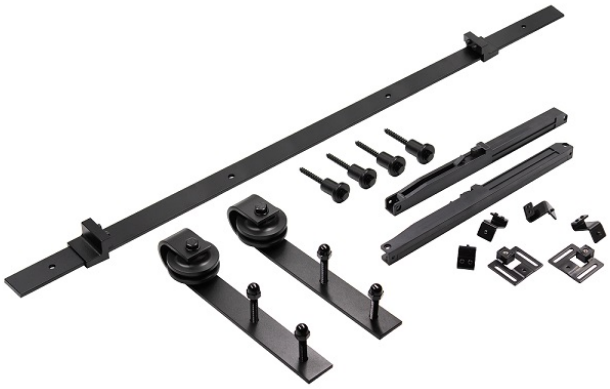

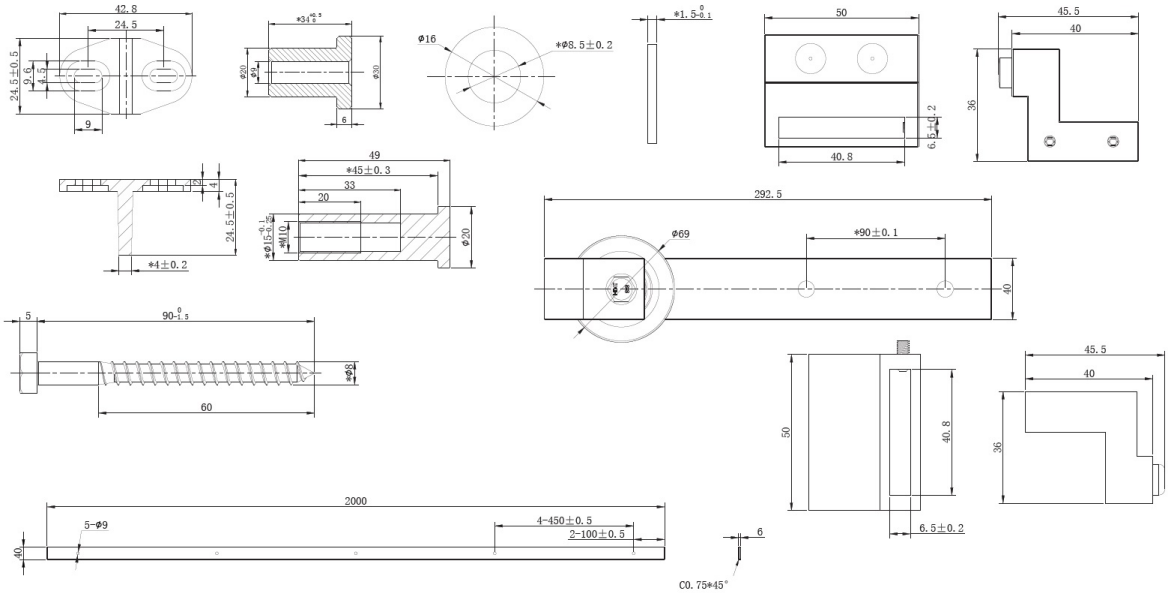

SISO A/S
Mileparken 11
DK-2740 Skovlunde
Denmark
VAT: 24786013

Phone +45 45 830 900

www.siso.dk
siso@siso.dk

Danske Bank
Nytorv Branch
Copenhagen
SWIFT: DABADKKK

Account no.
4180 3112 112936
IBAN Account
DK7230003112112936